O & M of Small Water Systems

Washeterias

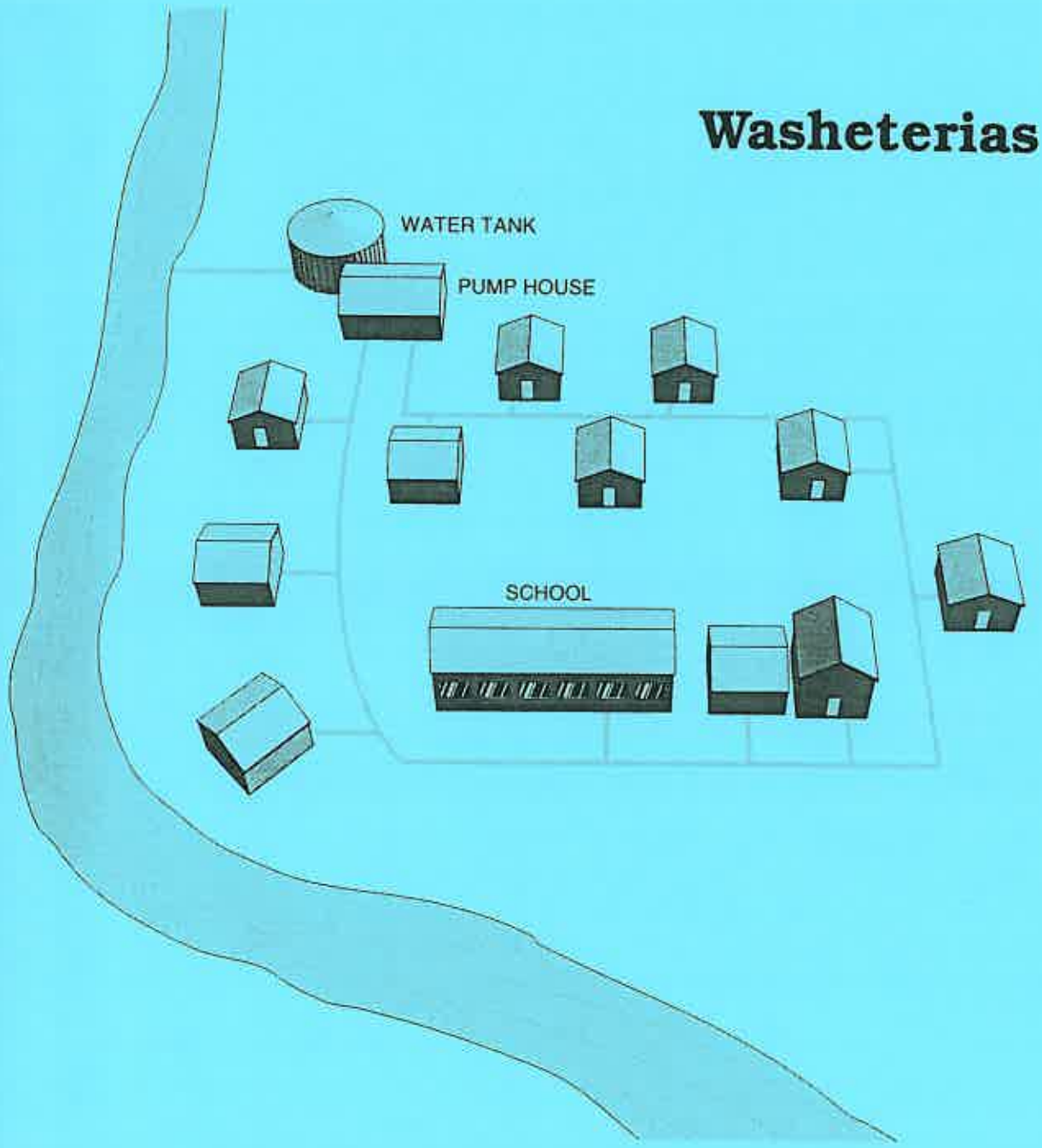

Alaska Department of Environmental Conservation
Skeet Arasmith

O & M of Small Water Systems

Funding for Development - Alaska Department of Environmental Conservation.

Development - Skeet Arasmith - Arasmith Consulting Resources Inc., Albany, Oregon.

Graphic Art - Kimon Zentz - Arasmith Consulting Resources Inc., Albany, Oregon.

Review team - Greg McPhee-Village Safe Water, Larry Strain-IHS Office of Environmental Health and Engineering, Linda Taylor-ADEC, Bill Fagan & Kerry Lindley-Department of Environmental Conservation, Jim Ginnaty-SEARHC.

Project Managers - Bill Fagan and Kerry Lindley.

© 1993
ACR Publications, Inc.
1298 Elm Street SW
Albany, Oregon
(503) 928-5211

TABLE OF CONTENTS

Introduction to Washeterias

Introduction 2
Components 4
- Building 4
- Water System 6
- Laundry Facilities 7
- Toilet and Bathing Facilities 9
- Heating System 9
- Sewage System 11

Normal Operations 12
- Management Issues 12
- Operation Issues 13

Routine Maintenance 16
Worksheets 17

INTRODUCTION TO WASHETERIAS

WHAT IS IN THIS MODULE?

1. The functions of a washeteria.
2. The basic components of a washeteria.
3. Normal operational routines.

KEY WORDS

- Boiler
- Gray Water
- Heat Recovery
- Watering Point
- Glycol
- Heat Exchanger
- Lint Trap

MATH CONCEPTS DISCUSSED

- None are discussed

SCIENCE CONCEPTS DISCUSSED

- Heat exchange

SAFETY CONSIDERATIONS

- Electrical Measurements
- Confined Space
- Handling Chemicals
- Handling Hot Water

MECHANICAL EQUIPMENT DISCUSSED

- Boilers
- Clothes Dryers
- Toilets
- Heat Exchangers
- Clothes Washers

INTRODUCTION TO WASHETERIAS

INTRODUCTION

General Description

Washeterias are central points that provide one or more environmental services not available to all or a major portion of the population of a village or camp. These facilities are called washeterias, central facilities and environmental service modules. Washeterias are found in logging, mining and drilling camps throughout the US and Canada. There are a significant number of washeterias in villages in Alaska and Canada.

Module Content

There is no such thing as a standard or typical washertia. The services provided range from a single service to multiple services. Therefore, unlike other modules in this series, this module is general rather than specific. To be specific would mean duplicating what was in several other modules and then still not having one that fit the majority of the needs. We suggest that you select other modules to accompany this one, in order to develop a better understanding of the operation and maintenance requirements of a washertia. Other modules of interest may be:

- O & M Hypochlorinators
- O & M Fluoride Saturators
- O & M Boilers & **Heat Exchangers**[1]
- O & M Pressure filters
- O & M Greensand filters
- O & M of Groundwater
- O & M of Surface Water
- Normal Pumping Operations
- O & M of Storage Reservoirs

Functions

Washeterias are used to provide a variety of environmental services to individuals where individual services to homes are not available or in some cases not feasible. These services may include one or more of the following:

- Clothes Washers
- Clothes Dryers
- Drinking Water
- Shower
- Bathtubs
- Sinks

[1] **Heat Exchanger** - A device used to transfer heat from one substance to another without the two substances being in contact with one another. Typical heat exchangers are water to water and glycol to water.

- Toilets
- Saunas
- Heating for adjacent buildings
- Waste collection. While this is not very common, they are occasionally used as honey bucket collection sites. Sewage is then typically pumped from the washeteria to a lagoon or flows to a septic tank.

Facility Size

Washeterias are used to provide services to villages and camps ranging in population from 25 to 600 people. They have been designed and built in a variety of sizes and shapes from 850 square feet to 3400 square feet.

SUCCESS

Other Facilities

Washeterias have proven to be the most successful, in terms of being able to provide services at a cost level acceptable by members of the village. They are also providing services to other facilities. Typical of these facilities are the school and health clinic. In some cases, the washeteria is provided in conjunction with a standard circulation system that serves a portion of the community.

Heat Recover

Heat needed for clothes dryers is very expensive to produce. The more successful washeterias use heat recovery from the power generating facility for this function.

Revenue

The more successfully run washeterias are those that are operated by the city as a business. If properly operated and maintained, and if a fair price is charged for the services the washeteria can be self-sufficient.

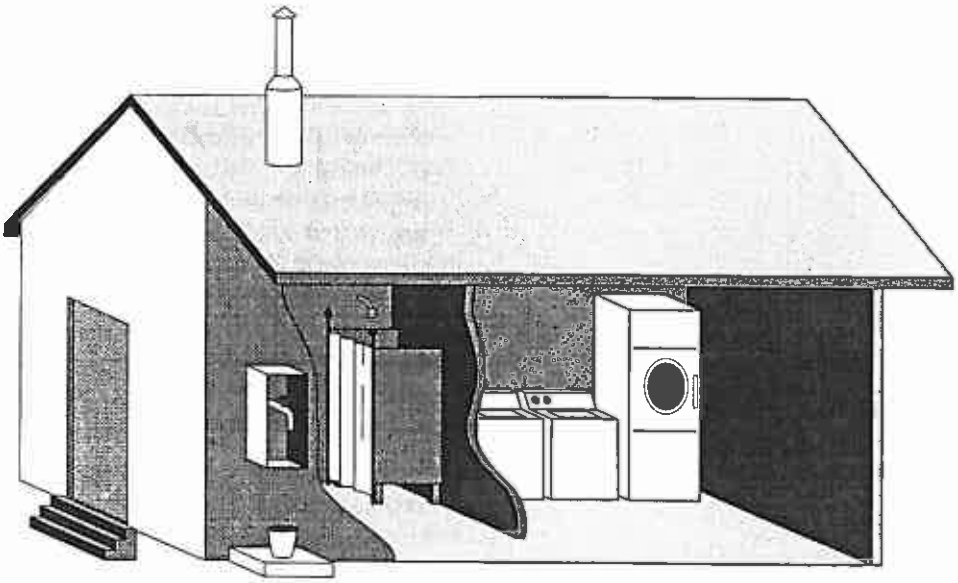

COMPONENTS

Typical System

Because there is no such thing as a typical washeteria, we have made up a typical theoretical unit. This was done to allow us to discuss the various systems found in the wide variety of washeterias that are found in rural Alaska and Canada. The typical theoretical unit we have chosen includes all of the services listed above.

Systems

Our theoretical typical washeteria has the following subsystems.

- Building
- Water system
- Laundry facilities
- Toilet and bathing facilities
- Heating system
- Sewage handling

BUILDING

Wood Frame

The most typical washeteria building is a wood frame building, elevated above ground. The services portion of the washeteria is separated from the treatment portion.

Entrance

The entrance is designed to reduce snow entry into the buildings. Typical of this design is the use of concrete or slotted metal steps and landing. The better facilities have a double entry to prevent the loss of heat and allow those entering the building a place to remove heavy coats and boots.

Floors

The floors in the service portion are commonly concrete or wood covered with commercial grade vinyl. In the treatment portion of the building, the floors are usually plywood sealed and painted with a wear resistant epoxy.

Heating

Heat for the building is commonly provided as part of the diesel fired **boiler**[2] system or waste heat from the electrical generator system. One method of distributing the heat is the use of plate heat exchangers with a fan to move air through the plates. The second common method is a forced air system. This system requires air ducts, an air intake system and a heat exchanger. Commonly the building heat system is designed and built in conjunction with the clothes dryer system. Waste heat from the clothes dryers is used to heat the building.

Counter Space

When washer and dryer facilities are available, there is typically plastic laminated (Formica™) covered counter tops to facilitate sorting and folding clothes.

[2] **Boiler** - A device used to heat a fluid. Includes a burner assembly, fire box and water jacket.

Change & Sodas

The more successful facilities provide a coin or token dispensing machine as well as a standard soda pop dispenser.

Generator

It is a common practice to have a diesel powered generator in the facility to provide power, in case of a failure of the local power generator facility.

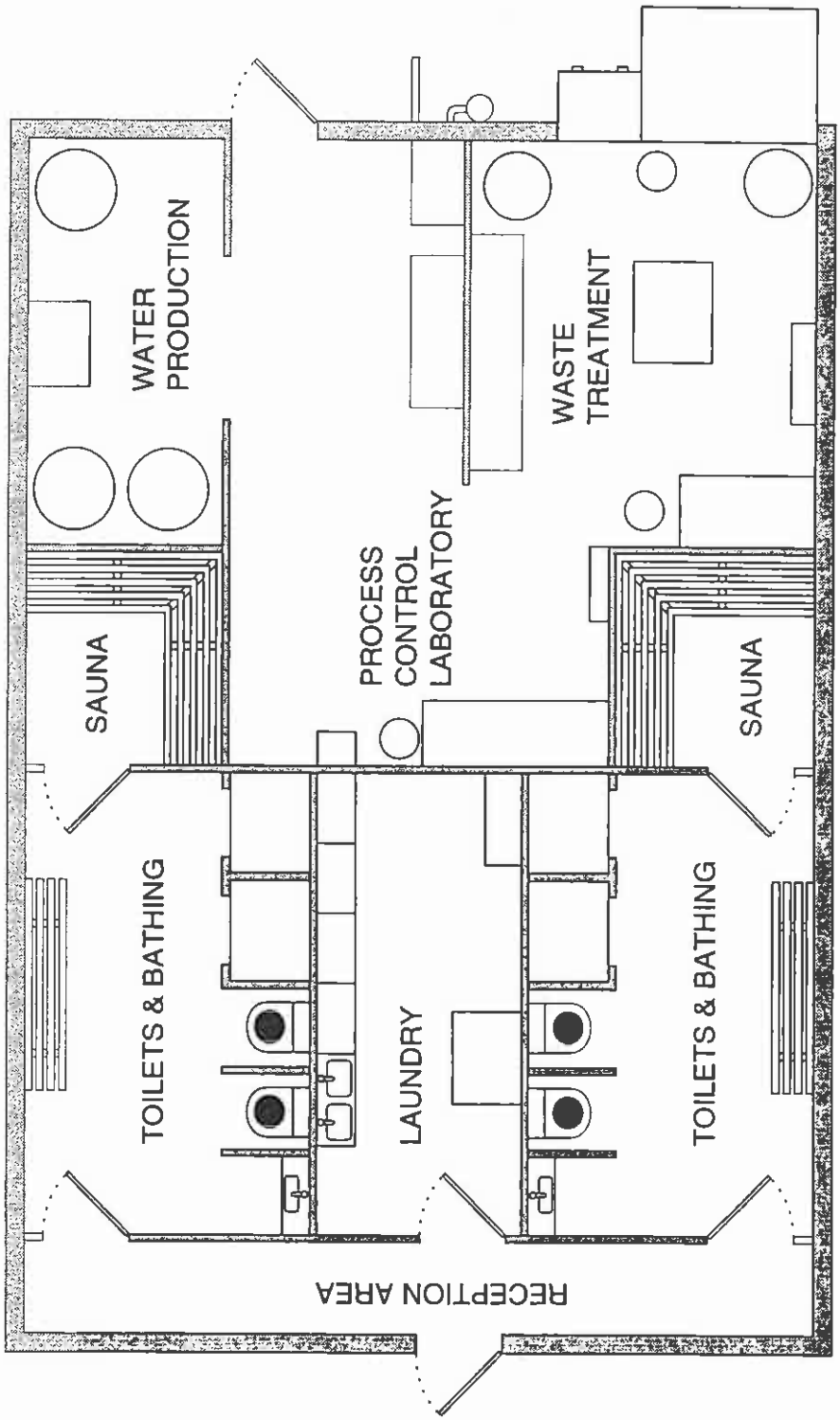

WATER SYSTEM

Other Material

Information on the operation maintenance, and safety aspects of specific water system components as well as information on chemical handling can be found in the specific O & M modules listed at the start of this text material.

Normal

The water system for a washeteria is typical of most water systems. Our example facility has a surface water source, where water is pumped from a river using a fill and draw process.

Filtration

The raw water is filtered through pressure sand filters. These are standard pressure filters using sand as their primary filter media. In some locations cartridge and bag filters are used instead of the pressure sand filters.

Chemicals & Storage

As water leaves the filter, chlorine and fluoride are added and the water is stored in the fill and draw storage reservoir. Typical reservoirs are 7,000 to 11,000 gallons. This reservoir may be internal or external of the building and is most often made of steel and insulated with polyurethane.

Heating

The temperature of the water in the storage reservoir is maintained from a double walled **glycol**[3] to water heat exchanger. The heat exchanger is part of the heating system described later.

Pressure System

Water is pumped from the storage reservoir into pressure tanks. These pressure tanks are the Well-X-Troll tanks with bladders. Thus they do not require any special air valves or a compressor. The pressure pumps are cycled from a signal from a standard pressure switch placed in the discharge line of the pressure tanks.

Internal Plumbing

Water is supplied directly from the pressure tanks to the water heating system and the other internal plumbing system for the building.

Adjacent Buildings

Heated utilidors run from the washeteria to the school, health clinic and city office building. Water is circulated by a pump through these utilidors.

Watering Point

While not always a part of the washeteria, our theoretical facility includes an external **watering point**[4]. The watering point may be composed of hose and real system with the hose penetrating from the wall or a single hose that penetrates the wall. The hose must be long enough to allow access to the water but short enough not to touch the ground. Access to water may be a manually operated push button or a coin operated device that opens and closes a solenoid valve. In most

[3] Glycol - Common name for ethylene or propeleylene glycol, a colorless, thick, sweet liquid used as an antifreeze. Ethylene glycol is highly toxic and should not be used.
[4] Watering Point - A place in a community where members of the community can obtain potable water.

instances, the solenoid valve is on a timer. This prevents excessive loss of water.

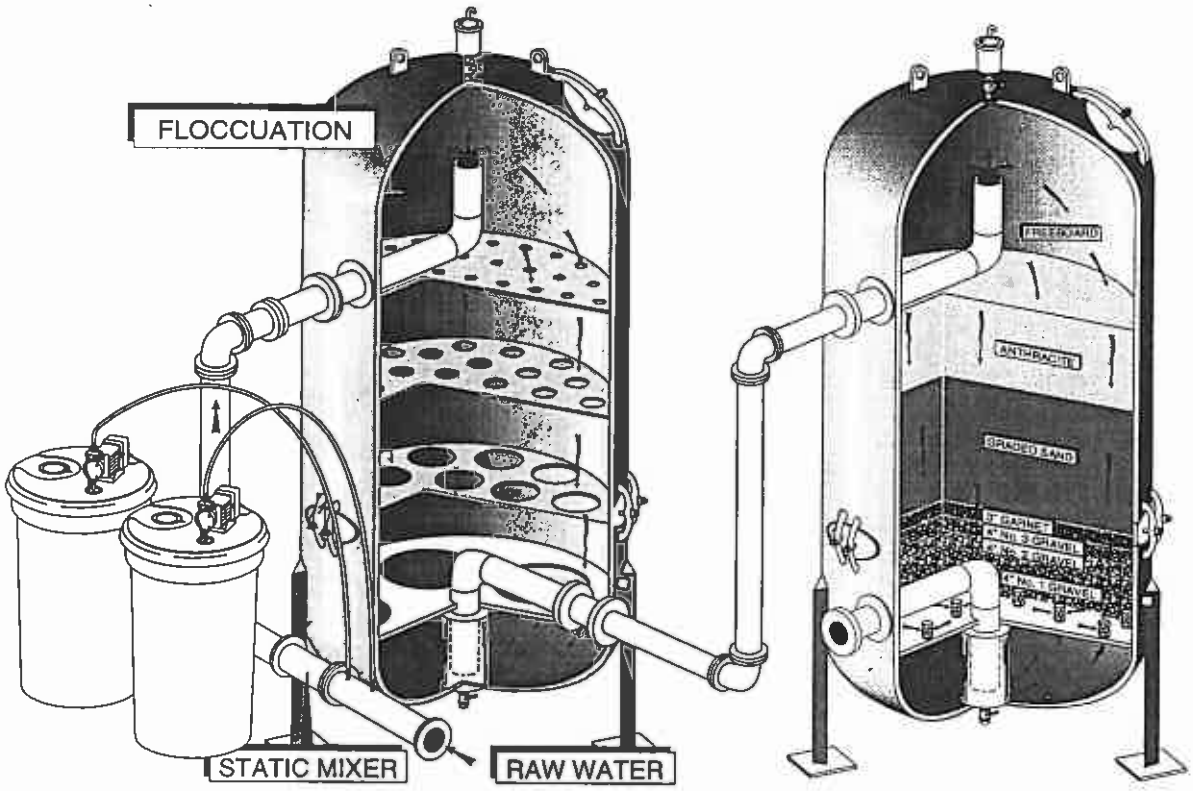

Typical - Direct filtration - Pressure Filter System

LAUNDRY FACILITIES

WASHERS

Types

Washers used are standard commercial clothes washers. The most popular are Speed Queen and Wascomat. In most cases these washers are coin or token operated.

Hot Water

Hot water for the washers is provided by one of two means. A diesel fired water heater or a glycol to water heat exchanger type water heater. These later devices are very efficient and provide hot water quickly. The key to their efficiency and quickness is the size of the heat exchanger. It is very large compared to the overall size of the device. This device is often called the hot water generator rather than water heater.

Gray Water

The water leaving the washers is called **gray water**[5]. It exits the washers into the sewage collection and treatment system. Internally in the building this water is under gravity flow conditions once it leaves the wash-

[5] Gray **Water** - The term used for wastewater that does not contain human waste. Typical gray water sources are washers, showers and sinks.

er. To reduce the load synthetic fibers can have on a septic tank or other treatment system, special **lint traps**[6] are installed in the effluent of the washers. These lint traps are commonly composed of a series of two screens placed at a slight angle. The angle helps prevent plugging and presents a large surface area to the water flow.

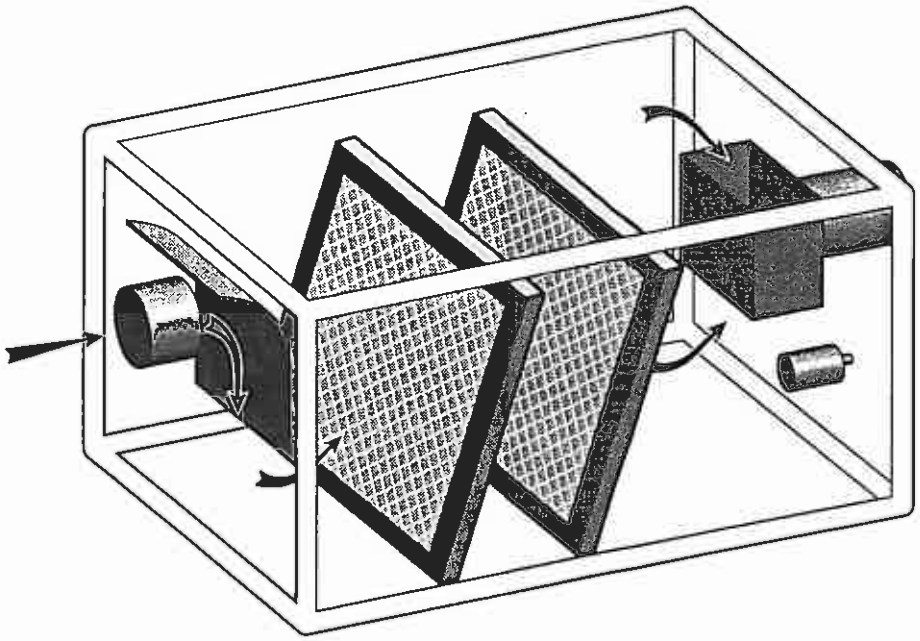

DRYERS

Types

Dryers used in washeterias are standard commercial Laundromat dryers. The most popular brands are Hoyt-Huebsch. These are commonly coin or token operated devices.

Heating

The two most common heating systems used for washeteria dryers are hot air and hot water. The hot air is provided by a boiler and heat exchanger system, with air being blown across the heat exchanger coils. The hot water system uses a water loop directly from the hot water boiler. Circulating pumps at each dryer circulate the hot water. A fan is used to force air through the drier.

Heat Recovery

When possible a **heat recovery**[7] unit is installed in the nearby power generation facility. These heat recovery units are used for heating the building, utilidor or the dryers.

Exhaust Air

The exhaust air is collected into the air duct system and often used to help heat the building.

[6] **Lint Trap** - A device placed into a water or air flow to trap lint, hair or other material that can cause a problem with the system if the lint goes beyond this point.
[7] **Heat Recovery** - A process of recovering and using heat that normally would be lost.

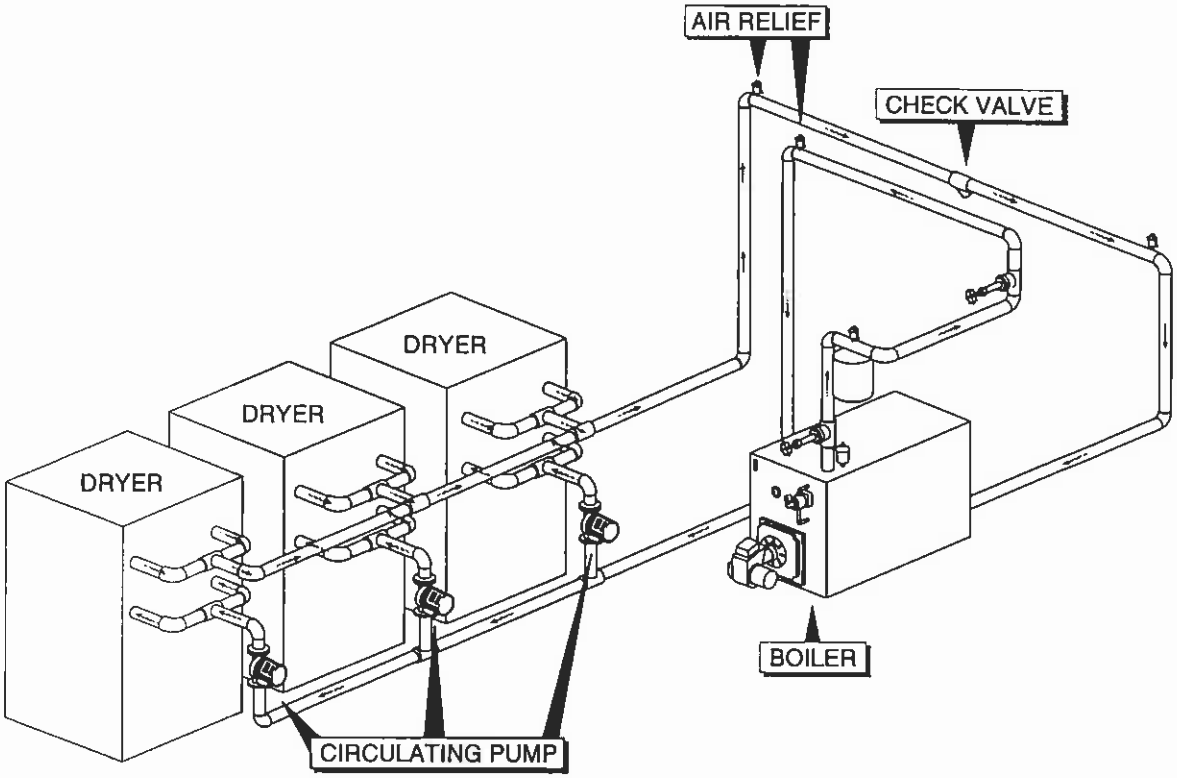

TOILET AND BATHING FACILITIES

Separated Facilities

When toilet and bathing facilities are provided, there are separate men's and women's facilities. While toilets normally have no restrictions on use, showers are commonly coin operated. Water is provided through the building plumbing system.

Waste Handling

Gray water from the showers and wastewater from the toilets and urinals is collected by the building wastewater plumbing system and piped to the sewage system.

Saunas

Occasionally electric or oil fired saunas are provided in a washeteria. These are usually separately operated facilities for men and women.

HEATING SYSTEM

Introduction

Depending on the type of dryers used, the heating system may be composed of one or two or more boilers.

Water Heating - Boilers

The boiler used to heat water is a typical low-pressure (less than 25 psi) operating at 180°F to 200°F. The boiler is used to heat glycol or a glycol and water mixture. The glycol is pumped through a double wall heat exchanger. Hot water exits the heat exchanger.

Water Heaters

In some locations a diesel fired water heater is used. With this device, cold water enters a storage tank where it is heated by a diesel burner. The burner used is very similar to the burner used on the boiler.

Hot Water Generator

A popular method of providing hot water is the hot water generator described above. This device is composed of a tank with a large heat exchanger installed directly in the tank. The size of the heat exchanger, in relationship to the tank size, provides an efficient method of heating water.

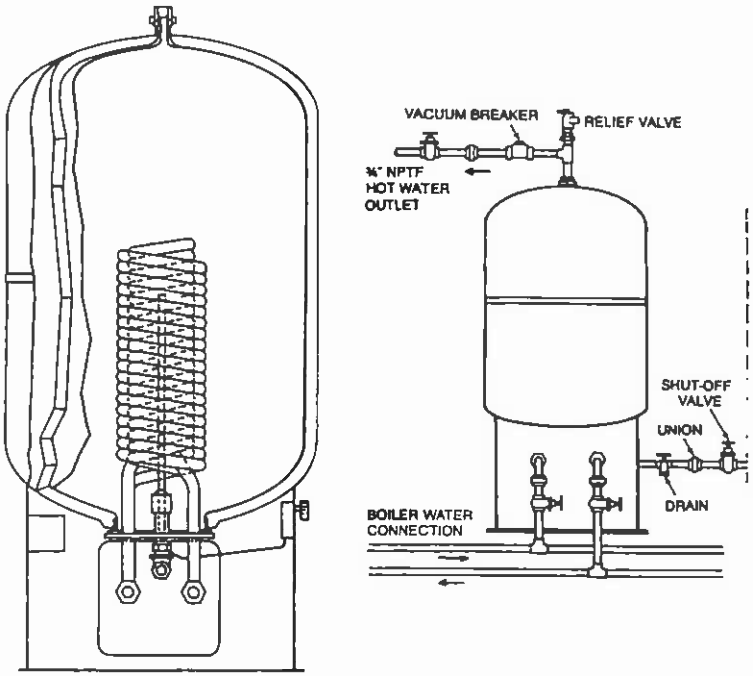

Uses of Hot Water

The heated water can be used, to heat the water in the storage reservoir, provide hot water for the washers and showers and heat the building. In each of these cases a heating loop is installed and a pump is used to circulate water through the loop.

Utilidor Heating - Glycol

When the washeteria provides services to adjacent facilities, the connection of these facilities is commonly through a utilidor. To prevent freezing in the utilidor a glycol loop is commonly installed in the utilidor. This is typically a 3/4 inch or 1 inch copper loop. Heated glycol is pumped through the loop. Heat is transferred from the copper to the air in the utilidor.

Utilidor Heating - Forced Air

When there is sufficient hot air from the heat recovery system or the dryers, the heating of the utilidor may be supplemented with forced hot air.

Dryer Boilers

Standard low pressure boilers are used for to provide heat for clothes dryers. The boilers operate at temperatures between 180°F to 200°F and 15 psi and 25 psi.

Air Intake System

A standard boiler system requires large quantities of air in order to efficiently operator. This air is supplied through an air intake system. The air system is connected to the outside. Heat loss is reduced by utilizing louvers at the intake. Failure of or blockage of the lou-

vers will drastically reduce the efficiency of the boiler system.

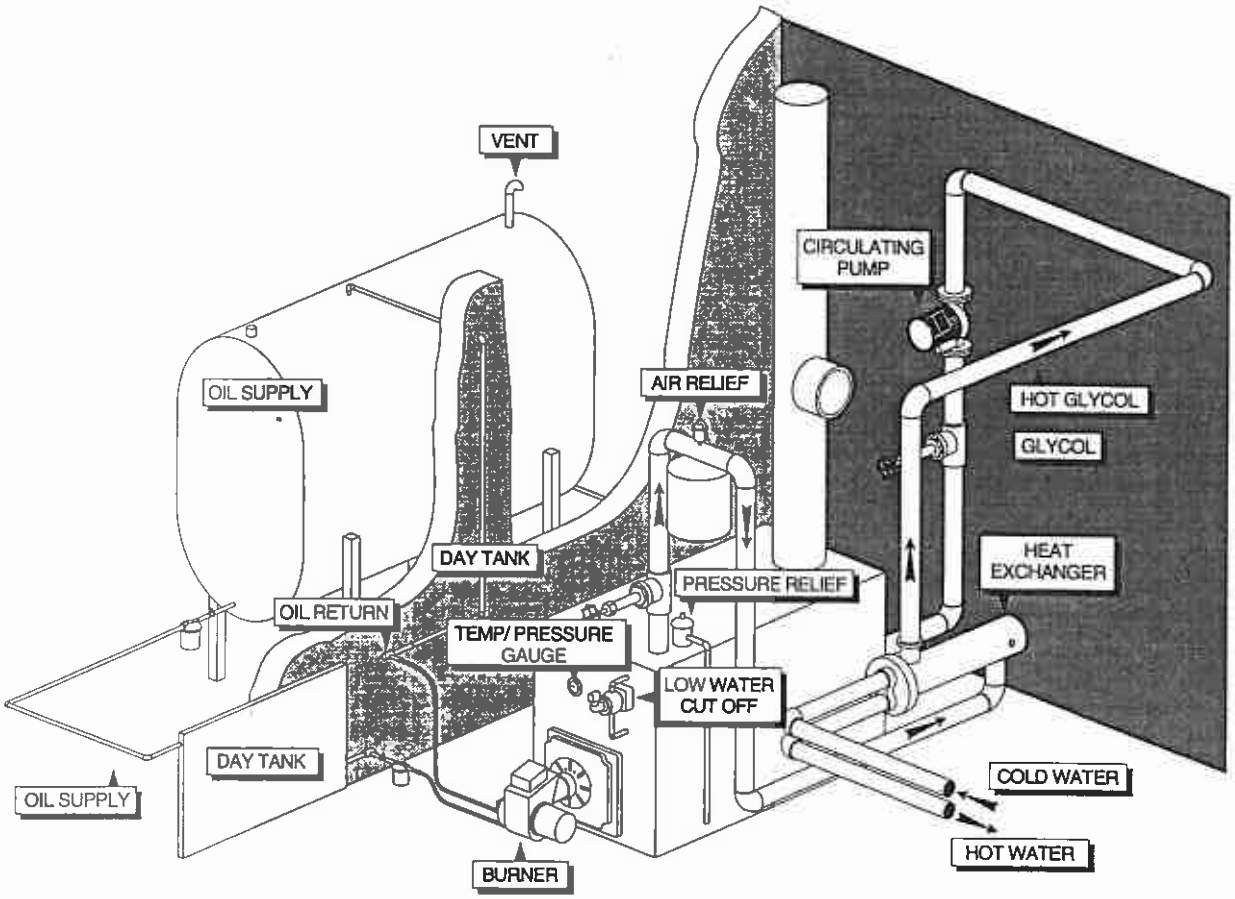

SEWAGE SYSTEM

Honey Bucket Collection

While each washeteria must have a means of handling its own wastewater, it can serve as a collection point for honey buckets. While this honey bucket collection point is not very common, it is none the less available in some locations.

Type of Treatment

While conventional biological treatment is occasionally available at a washeteria, the most common treatment facilities are septic tanks and sewage lagoons. If a septic tank is not used, the typical process is to install a lift station and holding tank at the washeteria. Wastewater is pumped from this holding tank through a force main to the lagoon.

Caution

Regardless of the treatment system, there is the potential of "sewer gases" entering the washeteria through floor drains and other fixtures attached to the sewer system. To reduce this hazard the "P" traps should be kept full of water.

NORMAL OPERATIONS

Division of Issues

The normal operating task of a washeteria can be divided into two general categories; management issues and operation issues.

MANAGEMENT ISSUES

The Problem With Fees

One of the major problems with washeterias is their potential drain on the financial resources of the community. Establishing equitable rates for showers, use of the sauna, washers, dryers and water is often difficult and plagued with political difficulties. One of the non-scientific methods of determining if the rates are in the proper range is to compare them with rates in Fairbanks and Anchorage. The rates for the same services should be higher in the village than in Fairbanks or Anchorage.

Spare Parts

Keeping adequate critical spare parts on hand can reduce the cost of emergency repairs. Without adequate spare parts, the operator is often required to have parts air freighted into the village, increase cost and causes excessive down time of the facilities.

Fee Base

There are three things that must be considered when developing fees; actual operating cost, maintenance cost and replacement cost. Actual operating cost and maintenance cost can be determined by keeping detailed records of labor, materials, supplies and services purchased on a month by month basis. Determining replacement cost, the rate of depreciation and deterioration of equipment often requires outside help. DCRA or the RMW can provide assistance in determining these costs.

Change Making

A second major management decision is, how to provide change to operate the coin operated devices. One of the common first steps that many villages have taken with this process is to avoid the coin process and instead use token operated equipment. The tokens can be purchased at the city office or from a token machine at the washeteria. Tokens and coins should be carefully counted and recorded each day. This is the best way to track income and cost.

Token Machine

The use of the token machine at the washeteria provides much better control of the income from the facility. Also, using tokens rather than coins, leaves only one coin box that is subject to break-ins that can cause a major financial impact on the community. Because token sizes and weights can be changed easily, the theft of large qualities of tokens can be combated by changing the acceptable token size. Using different tokens for showers, washers and dryers is one way to divide the various cost of different services.

Personnel

The last major management issue is the selecting of the operations and maintenance personnel for the washeteria. This selection should be based on mechanical skills and the ability and desire of the individual to perform routine janitorial tasks. Of major importance to the success of the washeteria is having operating equipment in a clean pleasant building. In order to maintain the washeteria there should be at least one permanent operator and one alternate operator.

Operator Duties

The operator is responsible for cleaning the washeteria, operating the water treatment plant, ordering parts, maintaining an inventory of parts and chemicals, performing preventive maintenance, testing water quality and completing routine reports.

OPERATION ISSUES

Two areas

Unlike other water and wastewater operations the washeteria is composed of two distantly different areas that must be operated and maintained differently. The two areas are the service area and the treatment area.

SERVICE FACILITY

Routine Hours

There are two keys to successfully operating a washeteria; properly operating equipment and clean facilities. Beyond this it is important that the washeteria be open at regular routine hours. These hours should be clearly posted and maintained. When there are expected changes in the hours, the community should be notified, in writing prior to the change.

Clean - Floors

The floor should be swept daily and washed at least 3 times a week. Daily mopping is not an unreasonable expectation. At least once each week the floors should be cleaned with a commercial disinfectant.

Toilet and Bathing

The shower stalls, toilets and urinals should be cleaned and disinfected each and every day they are used. The floor in the bathing facility should be swept and mopped with a commercial disinfectant every day.

Waxing Floor

The vinyl floor covering should be waxed with a high quality commercial wax at least once each quarter. During heavy use times it may need to be more frequently. The wax will speed the daily cleaning and preserve the floor

Clean - Equipment

The washers and dryers should be wiped down with a damp rag each day. The lint should be wiped from inside of the washers and dryers. The lint traps should be removed and cleaned.

Clean - Lint Traps

The gray water lint traps should be removed and cleaned each day.

Remove Trash

To reduce the possibility of fire, the trash containers should be emptied each day and cleaned with a disinfectant once a week.

Coins & Tokens

Tokens and coins should be removed from the washers, dryers, showers and pop dispenser each day (or as described by the management), the amounts recorded and taken to the City Office. The coin change machine should be checked and reloaded daily. Money received should be properly recorded and placed in the safe.

Lights

To reduce electrical cost the interior lights should be shut off each night.

Doors

The interior and exterior of the doors should be cleaned once each quarter.

Windows

The windows should be cleaned once each month. Inside and out (weather permitting).

TREATMENT FACILITY

Introduction

The operation of the equipment in the treatment facility will be found in the modules on each of the various pieces of equipment. Here, we will focus on general observations and data collection.

Building

The building, entrance, walkways, roof, foundation, doors, windows and etc. should be inspected at least once each year and the condition noted. This inspection is best done in the spring after the snow has melted. Maintenance requirements should be noted and action taken to perform the maintenance before freeze up.

Water System

The water system and related components, including building plumbing should be inspected for leakage at least once a month. Washers and bathing facilities, the hoses, faucets and shower heads should be inspected for proper operation at least once a week.

Water temperatures, water consumption, pump pressures should all be properly observed and recorded. The same is true of chemical consumption and filter operations. The following general check list can be used to identify the water system inspection and data collection requirements. Inspect and/or collect:

- ❑ Pump suction and discharge pressures
- ❑ Flow rates on loops
- ❑ Water consumption
- ❑ Differential pressures on the filters
- ❑ Chemical tank levels
- ❑ Quantity of chemicals used
- ❑ Chlorine and fluoride residuals
- ❑ Collect and mail bacteriological sample once a month
- ❑ Clean inside of water storage tank

Heating System

The heating system should be inspected on a regular basis. The inspection should include:

Once each day

- ❑ Check and record temperature in and out of both sides of the heat exchangers
- ❑ Check and record boiler temperatures
- ❑ Check and record boiler pressures
- ❑ Check and record pressures and operation of circulating pumps

Once each month

- ❑ Check the strength of the glycol
- ❑ Check the flow rates in each glycol loop

Twice each year

- ❑ Check for leakage on handhole gaskets on water heaters
- ❑ Replace anodes in the water tank
- ❑ Clean dryer exhaust ducts
- ❑ Check fuel storage tank for water
- ❑ Check condition of the building furnace fan

Once each year

- ❑ Clean the boilers
- ❑ Clean the burner and replace the nozzle
- ❑ Adjust the electrodes
- ❑ Perform smoke and combustion test
- ❑ Oil all motors
- ❑ Clean inside of water heaters

Sewage System

If a sewage system is a lagoon with a lift station at the washeteria then:

- ❑ Three times a week check the operation of the pumps
- ❑ Clean the wet well once each year

If the sewage system is a septic tank with multiple leach fields, then every six months switch leach fields.

ROUTINE MAINTENANCE

Importance

As mentioned in the section on normal operations one of the keys to a successful washeteria is having the equipment in an operating conditions This requires performing the inspections noted above and making repairs as necessary. The repairs may not be possible unless there are adequate tools and spare parts on hand.

Parts Inventory

The spare parts listing below is general in nature. You should consult the O & M manual and the other training modules on specific units to develop a completed list. The RMW in your area will be glad to help you develop a complete spare parts listing. The general list should include:

Washers

- Two sets of belts
- Two timers
- Two coin boxes
- Two door gaskets
- One transmission
- One electric motor
- Two sets of water inlet valves

Dryers

- Two sets of belts
- Replacement heating system
- Two timers
- Two sets of drum rollers
- Two door gaskets
- Two coin boxes

Showers

- Two replacement water control units
- Two shower heads
- Two sets of spare gaskets for water control units

Toilets

- Two complete sets of tank control valves

Urinals

- Two replacement water control valves

INTRODUCTION TO WASHETERIAS WORKSHEET

1. Which of the following services is **not normally** provided with a washeteria?

_____ a. Showers

_____ b. Clothes dryers

_____ c. Solid waste disposal

_____ d. Drinking water

_____ e. Clothes washers

2. The functions of a washeteria can be divided into two (2) general areas they are:

_____ a. Services and Treatment

_____ b. Washing and Drying

_____ c. Showers and Hot Water

_____ d. Water delivery and Services

_____ e. Sewage handling and clothes washing

3. An alternative to using coins to operate the washers and dryers in a washeteria is to use...

_____ a. Coin change machines

_____ b. Bill every member of the community monthly

_____ c. Charge as people enter the door

_____ d. Use tokens

_____ e. Use wooden coins

4. When a hot water dryer is used the boiler maintains the temperature between _____ and _____.

_____ a. 180 & 200

_____ b. 145 & 212

_____ c. 200 & 275

_____ d. 120 & 140

_____ e. 195 & 235

5. There are two lint traps in a washeteria. Where are they located?

_____ a. Gray water from washers

_____ b. Gray water from shower stalls

_____ c. Return line from the utilidor

_____ d. Air intake line

_____ e. Air duct from dryer

6. How often should toilets and shower stalls be cleaned?

_____ a. Hourly

_____ b. Once a week

_____ c. Daily

_____ d. Twice a week

_____ e. Once a month

7. A low pressure boiler used to produce hot water and heat potable water maintains a temperature between _____ and _____ °F

_____ a. 180 & 200

_____ b. 145 & 212

_____ c. 200 & 275

_____ d. 120 & 140

_____ e. 195 & 235

8. The two major keys to a successful washeteria operation are:

_____ a. Short hours

_____ b. Long operating hours

_____ c. Operating equipment

_____ d. Cleanliness

_____ e. Cheap prices

9. The surface and interior of washers and dryers should be cleaned how often?

_____ a. Hourly

_____ b. Weekly

_____ c. Monthly

_____ d. Quarterly

_____ e. Daily

10. The gray water lint traps should be cleaned

_____ a. Hourly

_____ b. Weekly

_____ c. Monthly

_____ d. Quarterly

_____ e. Daily